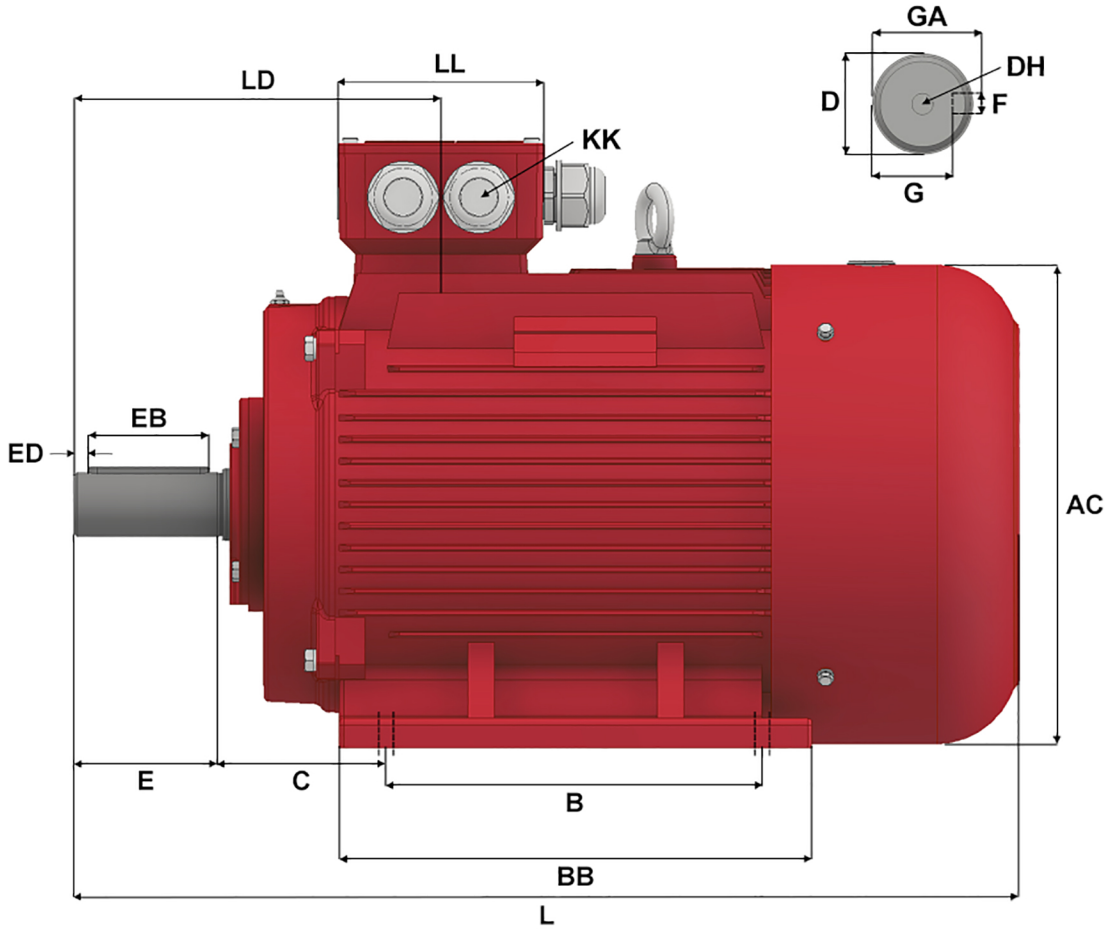

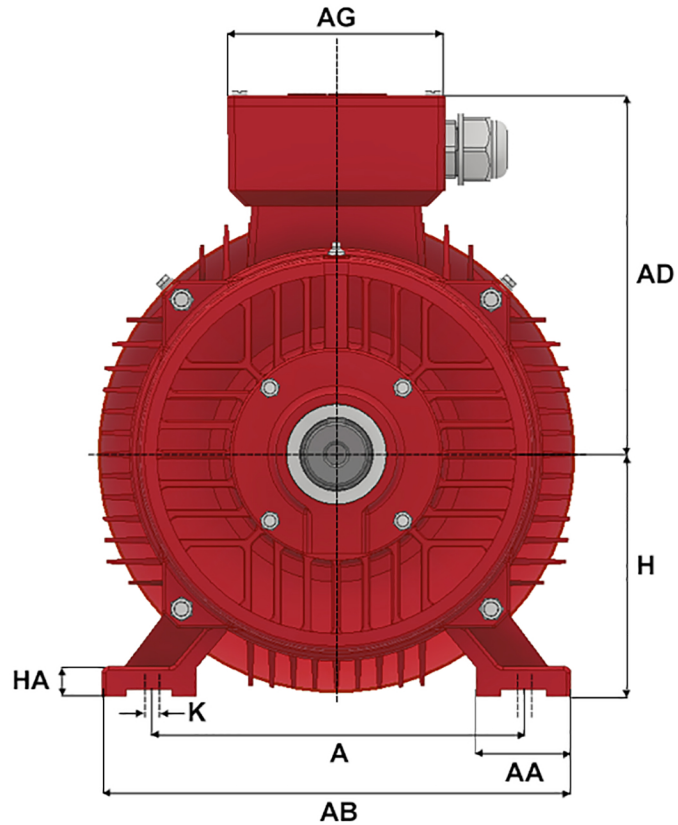

Version: 1JLEM			Revised: 09-11-2019			HP	RPM	FRAME	ENCLOSURE	IJC200L1-2-B3		
Customer is responsible in determining that Max Motion product will fit/perform suitably in the intended application						40	3560	200L	TEFC			
A	B	C	D	E	F	G	H	K	L	AA	AB	AC
318	305	133	55	110	16	49	200	4 - Ø 18.5	746	70	388	400
AD	AG	BA	BB	DH	EB	ED	GA	HA	KK (1)	KK (2)	KK (3)	LD
304	210	0	369	M20 X 42	100	5	59	25	M50 X 1.5	1.5'' NPT	M16 X 1.5	296
LL												
190												